table for unmentioned tolerance in the drawing (unit: mm)					
0-5	5-30	30-120	120-250	250-400	400-700
±0.15	±0.2	±0.5	±0.8	±1.5	±2

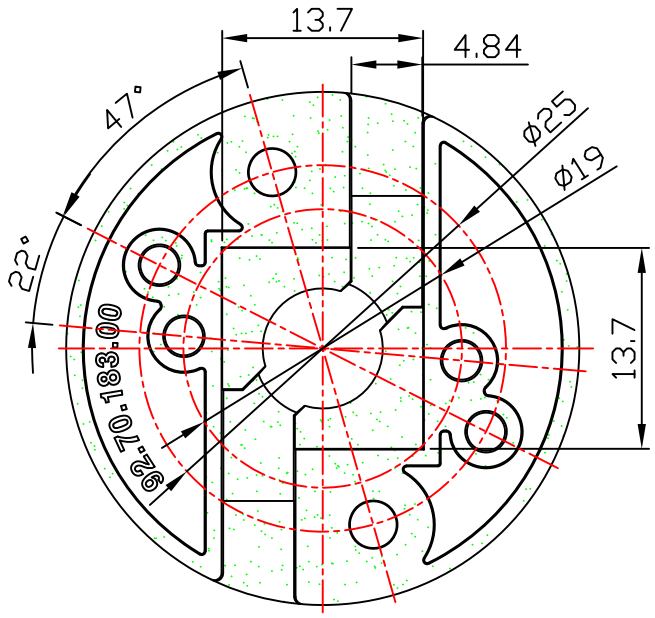

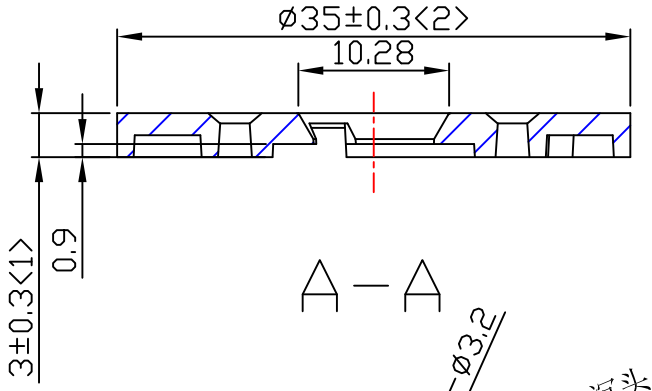

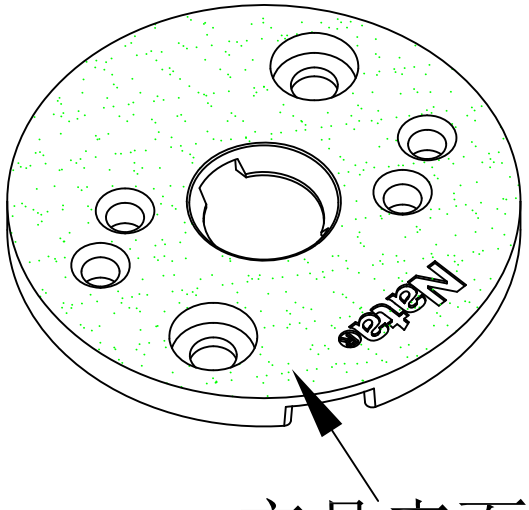

产品表面
做沙纹

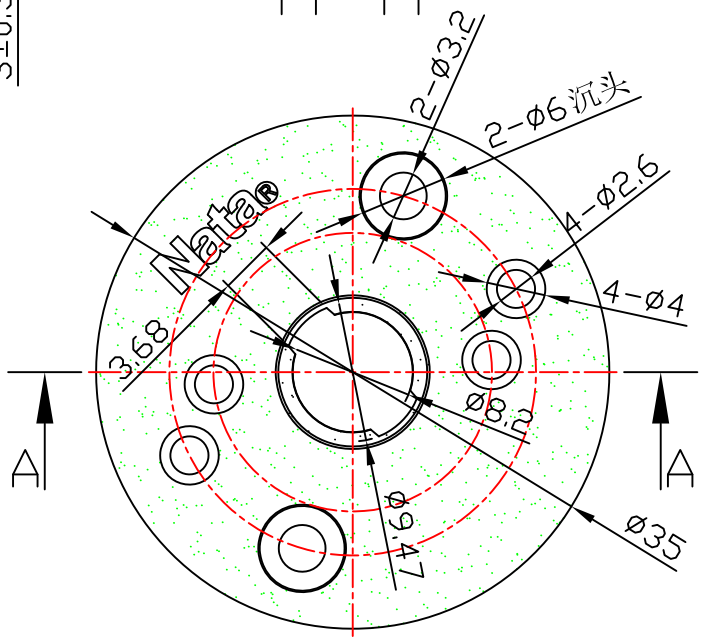

						Material:PC					Nata® NATA Lighting Co.,Ltd	
Mark	Amended Times	Amended Content			Signature	Amended Date					Customer Item	
Controll Version		A0	Design Version	K0	Client Version						Customer Code	NT
Designer			Drawing by		Proportion	1:1					Product Number	92.70.183.00
Technology			Auditor		View							
Approval			Date	2019.05.14	Page	Total_ Page_					Product Name	CLU701平面支架 D35xH3